4CABLING
Quality Products for a Connected World.

4Cabling PREMIUM HDMI 2.0 Cable

HDMI 2.0 Cable

High Speed with Ethernet Channel

RoHS compliant

HDMI 2.0 increase the maximum bandwidth of 18.0 Gbps enabling the leads to carry video resolution up to 4K @60hz .

The 4Cabling Ppemium HDMI 2.0 standard also supports HDR formats, HDCP 2.2, 3D, HEC and eARC (Enhanced Audio Return Channel).

The 4Cabling Premium HDMI 2.0 cable, also called High-Speed HDMI leads, are backwards compatible with older HDMI devices: simply plug it into any standard type-A Female HDMI socket and it's all good to go. Our leads are compatible with all previous standards. Compatible with all Blu-ray players, DVD players, LED, LCD, plasma and OLED TVs, Commercial Video Mixers, projectors, media players and the latest in gaming consoles.

With 24K gold-plated corrosion resistant connectors, and oxygen-free fully shielded construction HDMI 2.0 offers the most premium viewing experience your equipment can offer.

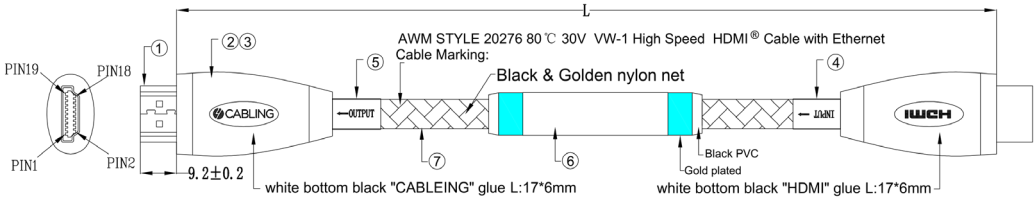

Premium HDMI 2.0 Cable

Lengths Available	
022.009.3015	15m

No.	Parts	Specification Standard
1.	Connector A/ B	Type A Male HDMI 19 Pin Pin: Gold Plated Connector: Gold Plated
2&3.	Mould	PE, Gunmetal & Gold plated
4.	Label	INPUT 10*25mm
5.	Label	OUTPUT 10*25mm
6	Repeater	1 HDMI signal booster w/ Gunmetal shell
4.	Cable	HDMI 19+1 26-28AWG BC (1/ 0.404BC*1P + D1/ 0.32BC + AL/MY)*5P + 1/ 0.32BC*3C +1/ 0.404BC*1C] + AL + D1/ 0.32BC + B128/ 0.12AM Material: Copper Jacket Material: PVC Colour: Black Overall Diameter: 8.2± 0.15mm

NSW GOVERNMENT
Queensland Government
GITC APPROVED
Certified System Quality ISO 9001
CCIQ Powering business potential
Bicsi SOUTH PACIFIC

Alexandria, NSW | Hoppers Crossing, VIC | Murarrie, QLD
1300 855 235 | sales@4cabling.com.au | 4cabling.com.au

4CABLING®
Quality Products for a Connected World.

4Cabling Premium HDMI 2.0 Cable Features:

- High video resolutions support resolutions up to 4K @60Hz (2160p), which is 4 times the clarity of 1080p @60Hz.
- HDR support ensures every moment of a video is displayed at its ideal values for depth, detail, and wider colour gamut on a scene-by-scene or even a frame-by-frame basis.
- The 4Cabling High-Speed HDMI Cable supports the 18G bandwidth for uncompressed HDMI 2.0 feature support. The cable also features very low EMI emission and is backwards compatible with existing HDMI devices.
- Support up to 32 audio channels for a multi-dimensional immersive audio experience and up to 1536kHz audio sample frequency for the highest audio fidelity.
- Simultaneous delivery of dual video streams to multiple users on the same screen
- Dynamic synchronization of video and audio streams

4Cabling Premium HDMI 2.0 Cable Specifications		
1.	Colour	Black with Gunmetal Connectors
2.	Supported Bandwidth	18Gbps
3.	Max. Resolution	3840px x 2160px @60Hz or 4K @60Hz (4:4:4)
4.	Operating Temperature	-25°C to 80°C
5.	Insulation Resistance	Min. 5MΩ
6.	Contact Resistance	Max. 15Ω
7.	Dielectric Strength	300V/ 10ms
8.	Audio Supported	eARC (Enhanced Audio Return Channel)
9.	HDCP Compliance	HDCP 1.4; 2.2
10.	Rated Voltage	30V
11.	Warranty	3 Years

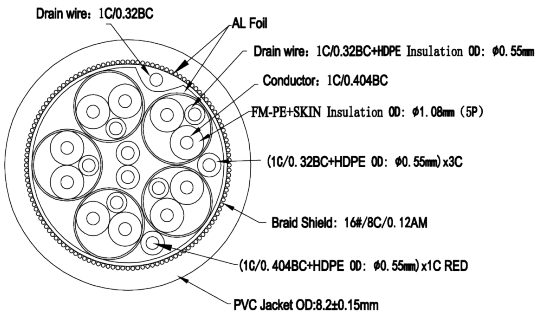

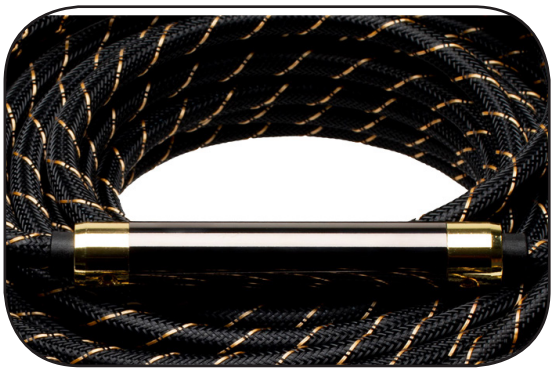

Premium HDMI 2.0 Repeater

NSW GOVERNMENT
Queensland Government
GITC APPROVED
Certified System Quality ISO 9001
CCIQ Powering business potential
Bicsi SOUTH PACIFIC

Alexandria, NSW | Hoppers Crossing, VIC | Murarrie, QLD
1300 855 235 | sales@4cabling.com.au | 4cabling.com.au